GOURMETIER®
KINGSTON CREATION

KUF332010DBN

Stainless Steel Farm House Double Bowl Kitchen Sink (L)33" X (W)20" X (D)10"
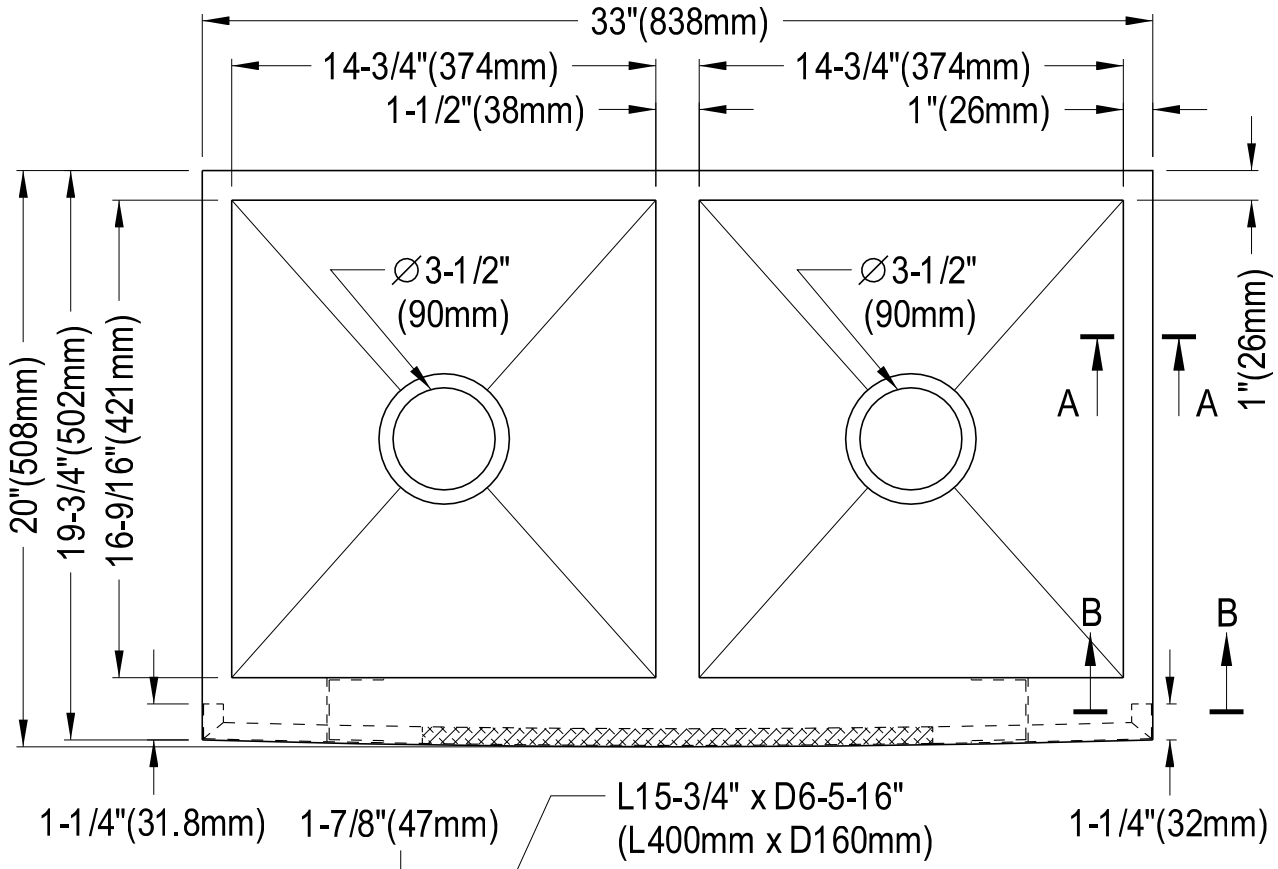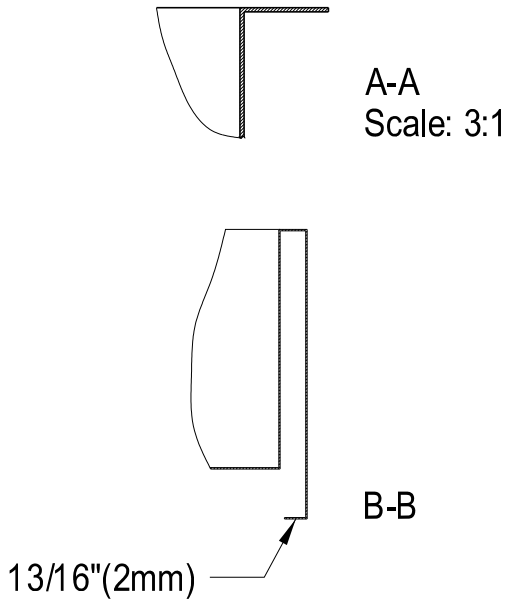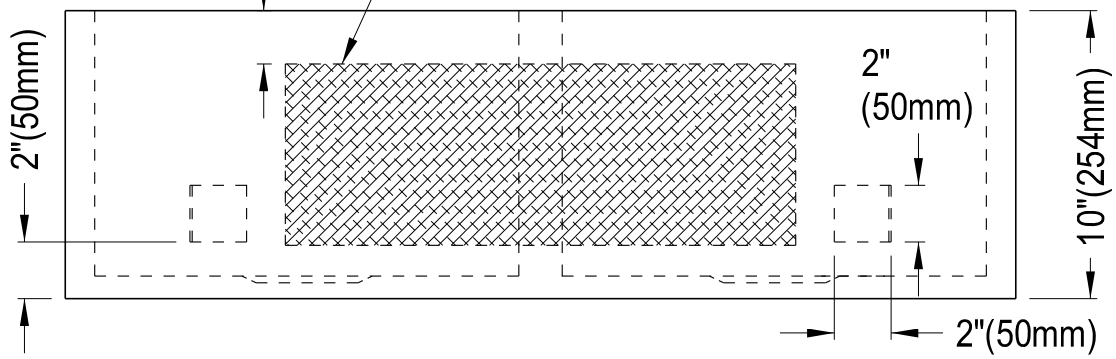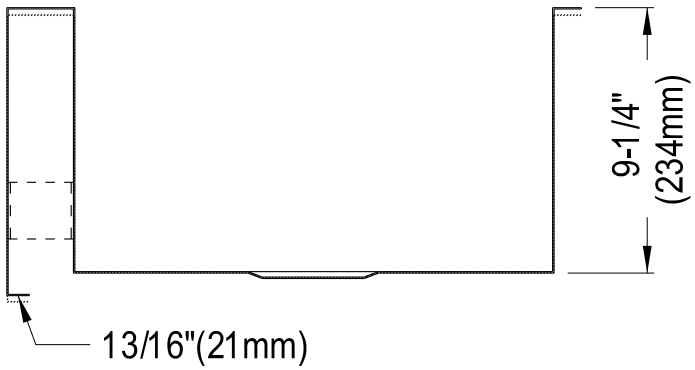
	Depth	Thickness	Gauge
Tub Body	10"	1.2mm	18
Front Apron		1.2mm	18