KS83215DL,KS83285DL
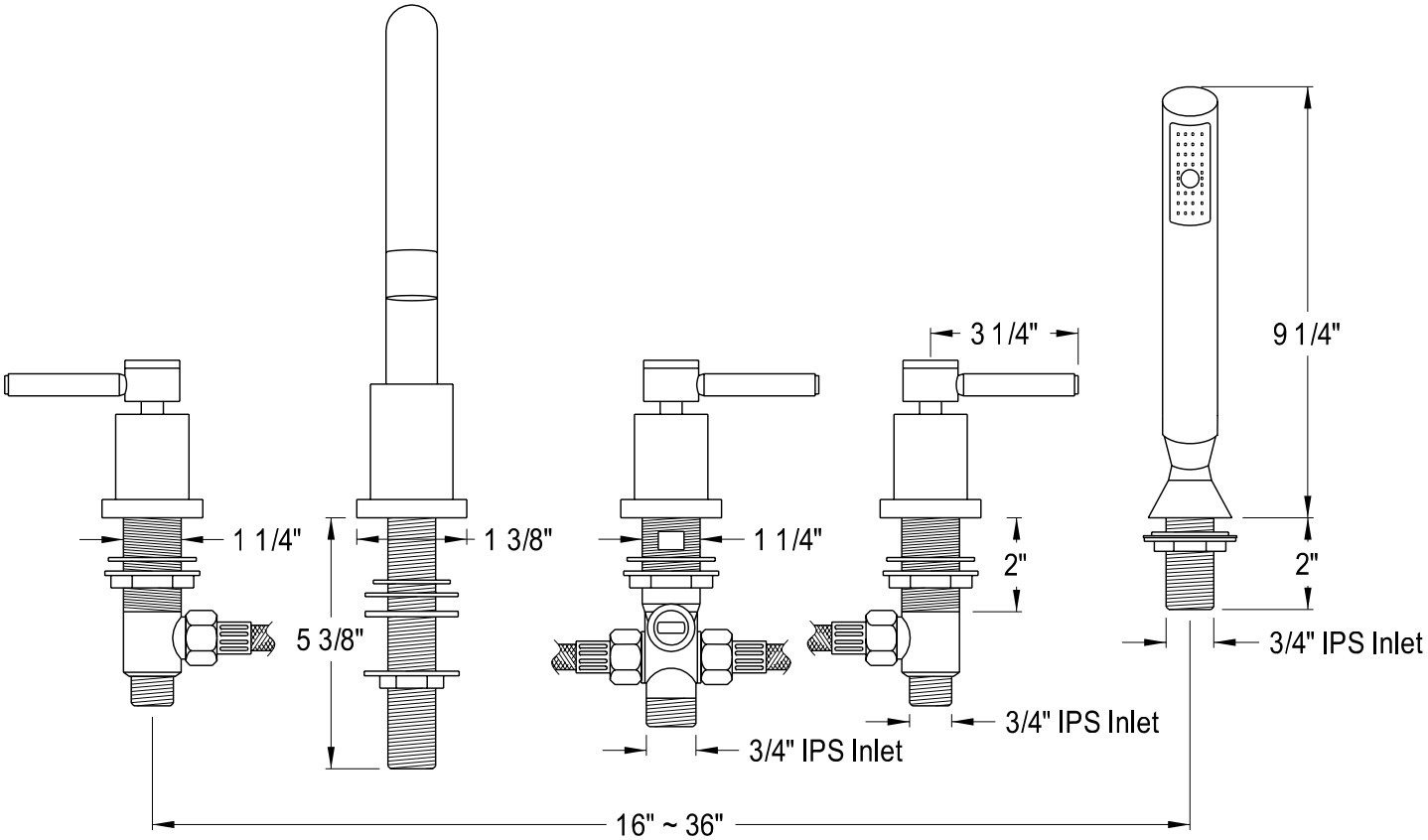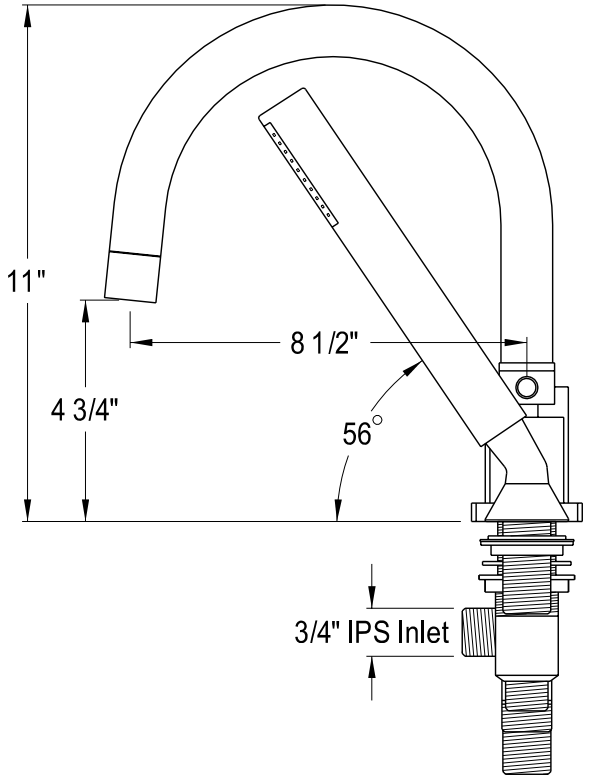
Roman Tub Filler , 5Piece