KB8961,2,4,5,7,8,9FL

2008-12-A
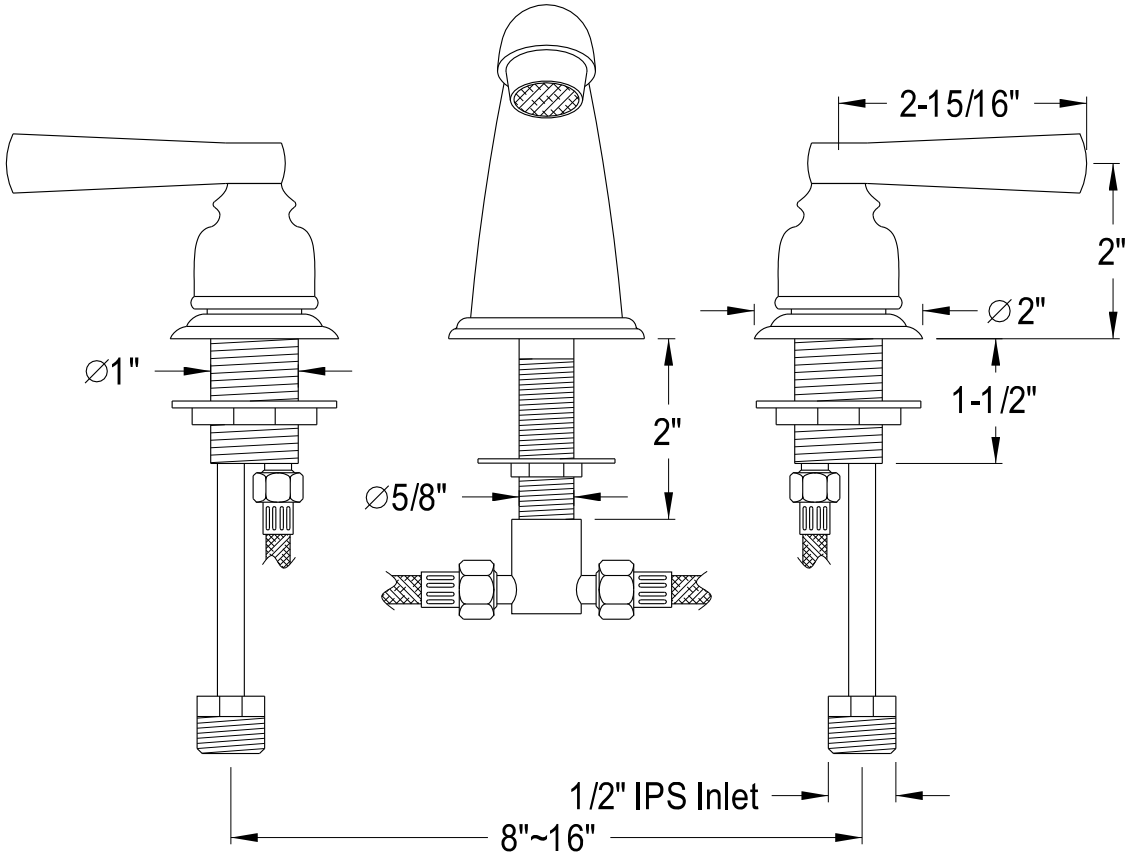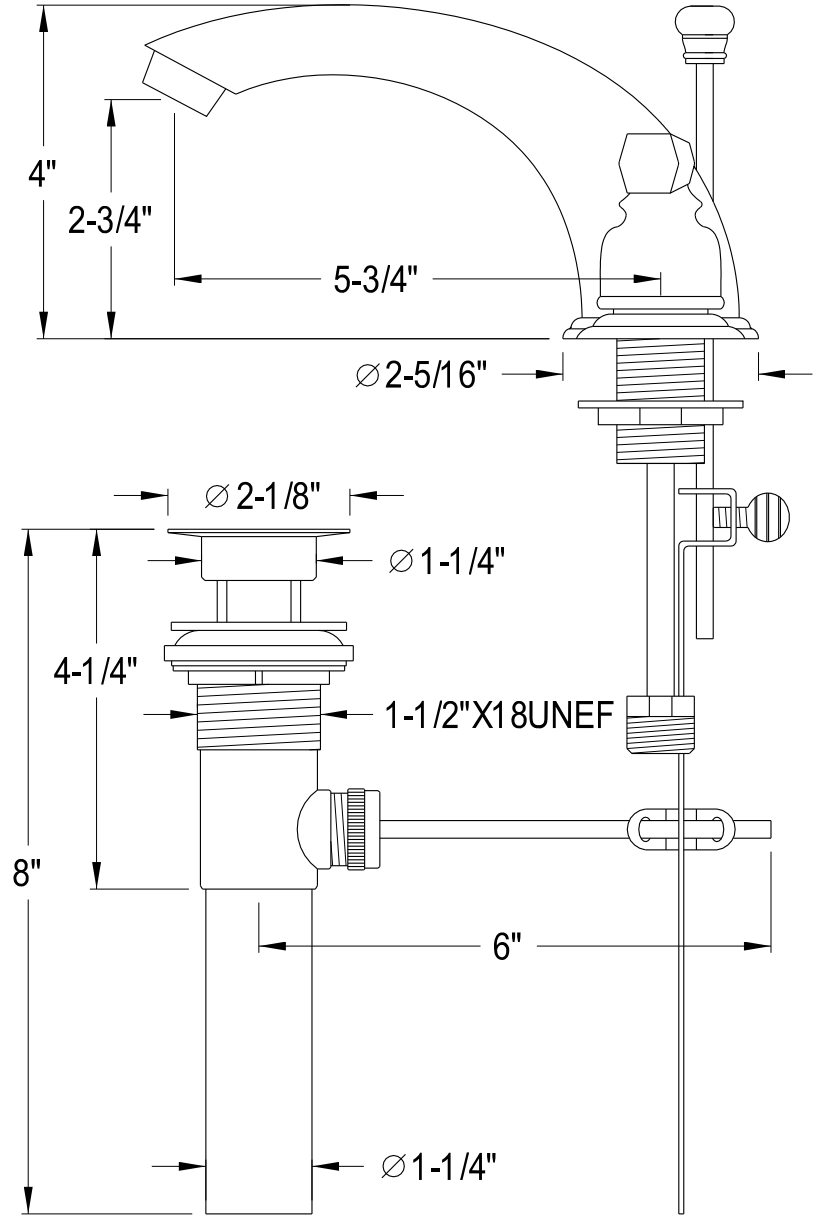
Widespread Lavatory Faucet ,With Brass Pop-Up