KB511

Single metal loop hndles 4" center set CP w. ABS pop-up

2003/08/14

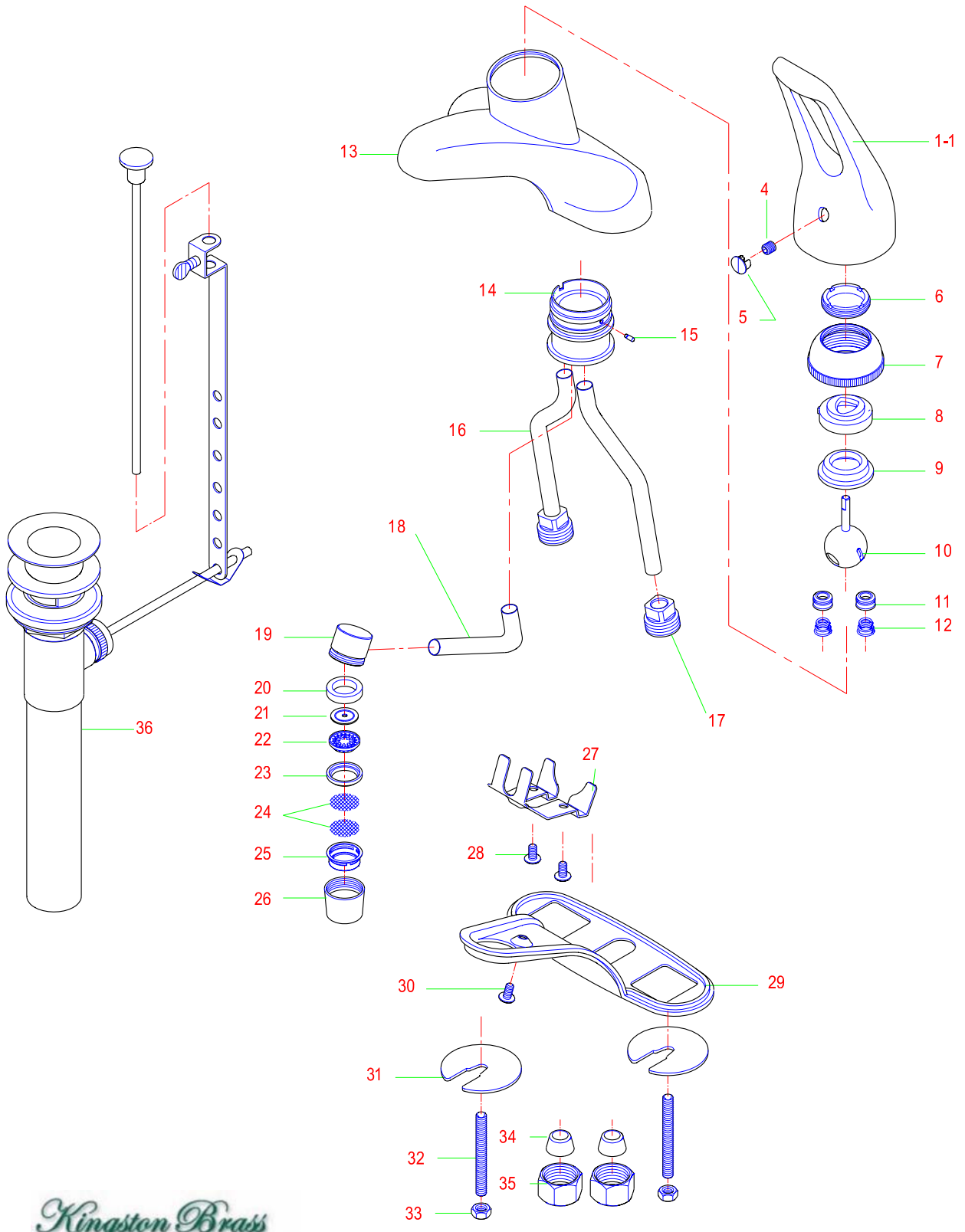

Kingston Brass
The Tradition of Fine Brass