ROHL
The Experience of Authentic Luxury™

www.rohlhome.com

Single Hole Lavatory Faucet

Cisal Bath Collection

AY51

FEATURES

- Ceramic mixing control cartridge
- Convenient traditional single lever style
- Cutout diameter: min. 1 ⅛″ max 1 ⅜″
- Long lasting, smooth flow control
- Deck mounted only
- Fixed spout
- Metal lever only

COLORS/FINISHES

- Polished Chrome
- Polished Nickel
- Satin Nickel
- Tuscan Brass
- Inca Brass

WARRANTY

- Limited Lifetime*

* No Warranty on Tuscan Brass Finish (TCB)

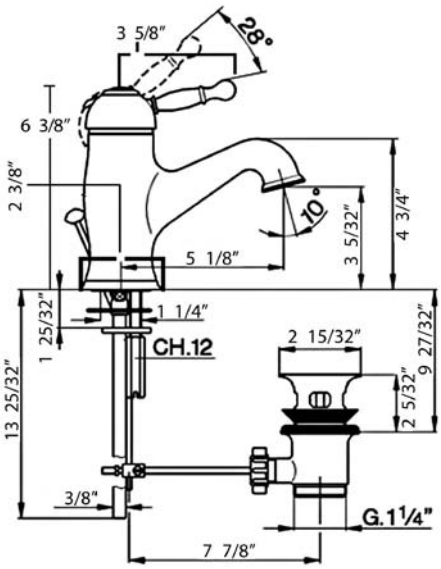

Consult your local Rohl showroom for additional information and specifications. For complete warranty details and a list of showrooms, go to www.rohlhome.com.

ROHL
The Experience of Authentic Luxury™

www.rohlhome.com

AY51 Spare Parts

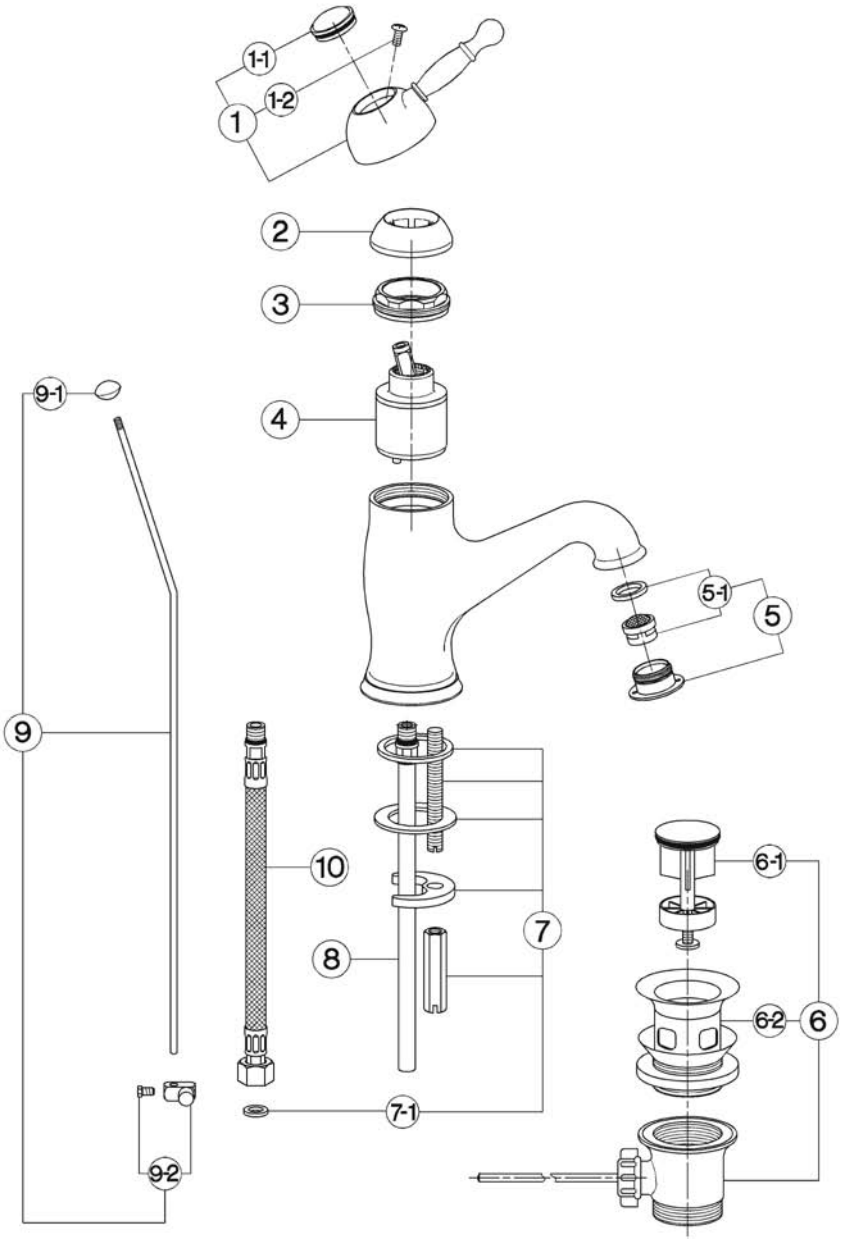

Consult your local Rohl showroom for additional information and specifications. For complete warranty details and a list of showrooms, go to www.rohlhome.com.