68” CAST IRON ROLL TOP TUB W/ 7” DECK HOLES

Cat. No.

CTR7H67

L: 68”
W: 30 1/2”
H: 23 1/4” (from floor to top of tub)
18 5/8” (from bottom of tub to top of tub)

The following is recommended for CTR7H60 tubs:
- Rim-mounted faucet: part **#4601**
- Straight bath supplies: part **#5577**
- Leg tub drain: part **#5599**
- Complete shower unit: part **#4063**

All CTR7H67 tubs have 7” centers in tub deck.

Gallon Capacity:	57
Shipping Weight:	502 lbs.
Empty Weight:	309 lbs.
Filled Weight:	787 lbs.

Features:

- ►Inside finish: White enamel
- ►Ball and Claw Feet available in 6 finishes or unfinished
- ►Tub exterior available as White (epoxy) or Unfinished (gray primer)
- ►Non-skid Strips
- ►Feet attached and leveled before shipment
- ►Tub thoroughly inspected before shipment

Foot Finishes:
BP Polished Brass
CP Polished Chrome
PN Polished Nickel
SN Brushed Nickel
WH White
ORB Oil-rubbed Bronze

Compliance Certification
Meets or exceeds the following specifications: A112-19-1M 1994.

Extra Paint Charge (inside of tub is always white enamel):
Bisque Paint - $160 **Black Paint** - $160
Bathtubs painted in bisque or black are considered “special order” and are not returnable.
Bisque or black painted feet are also available for the same price as white feet.

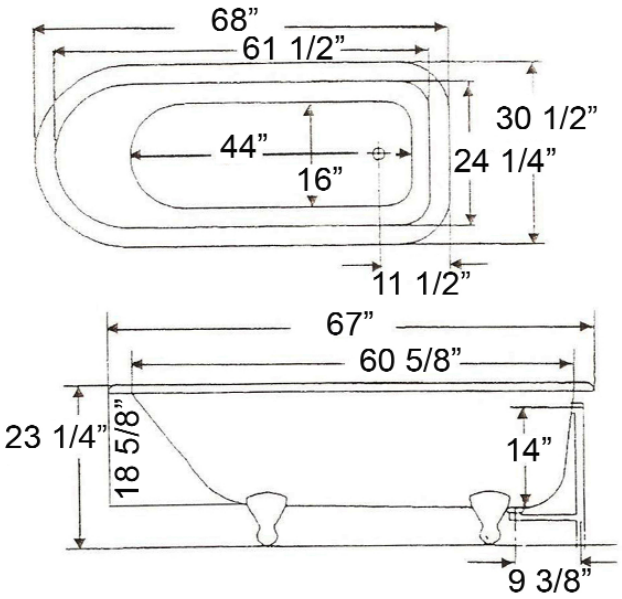

Dimensions of fixture are nominal and may vary within the range of tolerances established by ANSI Standard A112.19.2. Dimensions and specifications subject to change without notice.