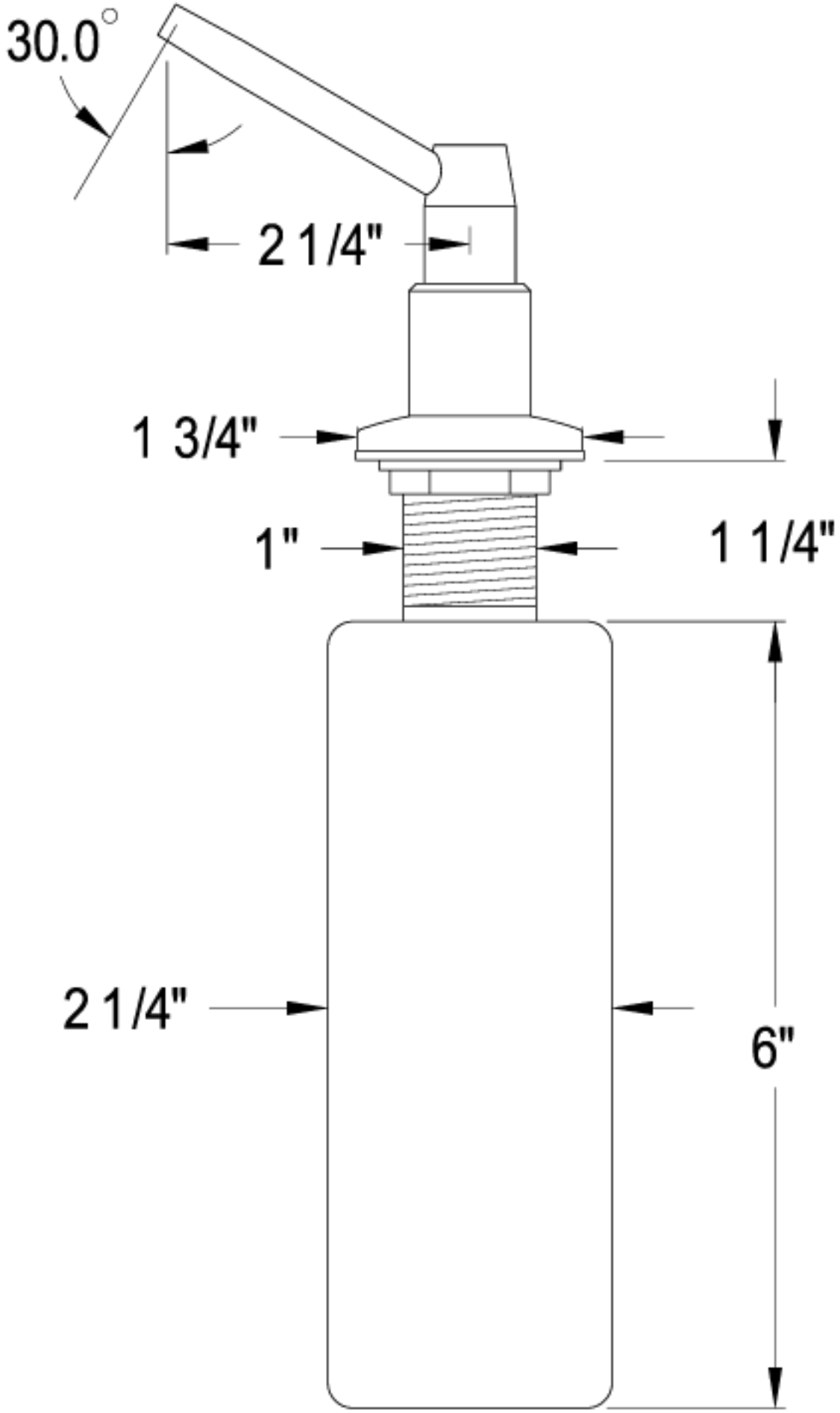ELINVAR SOAP DISPENSER