SPECIFICATIONS

SPECIFICATIONS

Voltage: Universal - 115/208/230VAC 50/60Hz
Wattage: 1450 watts
Amps: 12.6 @ 115VAC, 6.3A @ 230VAC
Motor: 1800 RPM brushless external rotor
Volume of Air: 150 CFM
Discharged air temperature: 136ºF / 58ºC at ambient temperature 68ºF / 20ºC
Sensor: Solid state infra-red, environmentally sealed
Circuit breaker: Bi-metallic temperature limiting circuit breaker, auto-resetting
Net Weight: 20 lbs. (9kg)
Dimensions: 13-3/4” H X 10-3/8” W X 4” D / 349mm H X 263mm W X 100mm D (Conforms to ADA)
Warranty: 10 + 2 years entire dryer - See website for details
Cover material: Cast zinc and steel
Available cover finishes: Powder coated polyester, chrome, stainless steel, or porcelain enamel
Mode of locking cover: Tamper-proof screws

FEATURES

Universal voltage – Auto-sensing circuit instantly adjusts to 115, 208 or 230 volts
High performance – 150 CFM output for quick drying
Ultra-quiet – 55 dB, the quietest dryer on the market
Durable – Top-quality materials and few wear parts
Low Total Cost of Ownership – 10-year warranty and modular ‘power pack’ mechanism that can be replaced in minutes without special tools
Beautiful – Elegant, low profile design available in a variety of finishes to integrate with every décor

C US

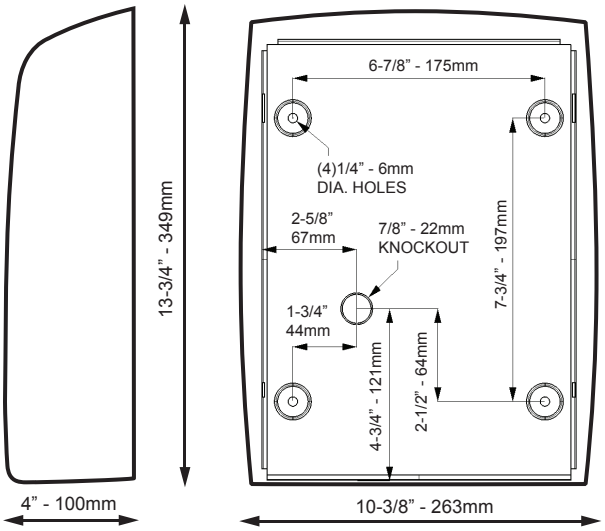

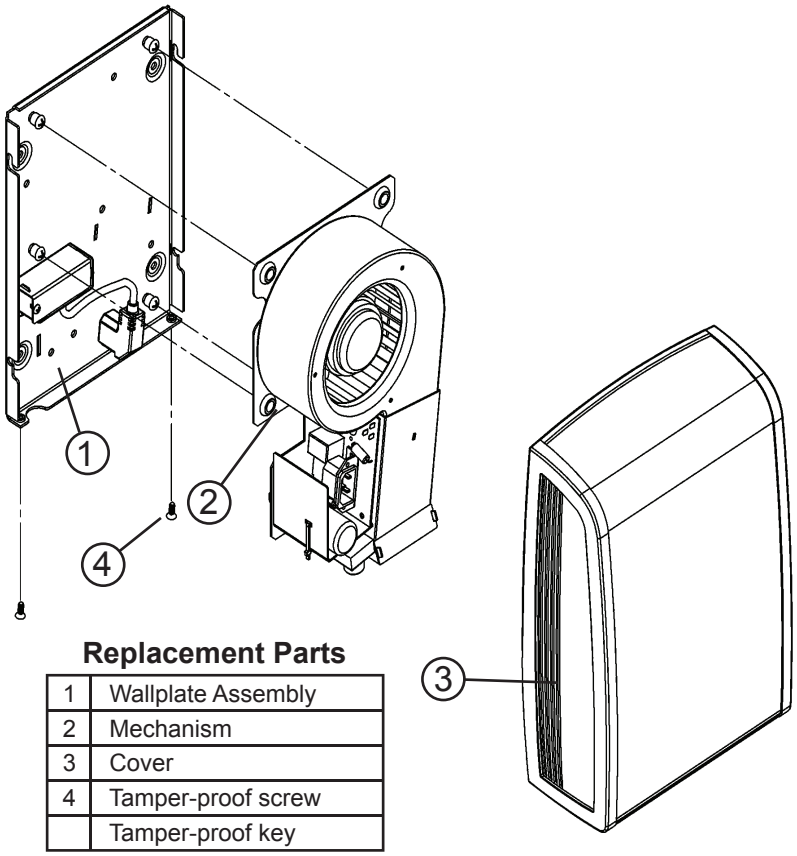

Replacement Parts

1	Wallplate Assembly
2	Mechanism
3	Cover
4	Tamper-proof screw
	Tamper-proof key

Distance from bottom edge of dryer to floor:

Men	47 in	119 cm
Women	44 in	112 cm
Children 8-10 years	35 in	89 cm
Children 11-13 years	38 in	97cm
Children 14-16 years	44 in	112 cm
Disabled	36 in	91 cm

Comac Corporation Inc.
www.comaccorporation.com
P.O. Box 8287, Warwick, RI 02888
Tel: 401-461-7900 • 800-977-5306 • Fax: 401-461-7700

Printed in Canada