Lovan M3-60” AVR

DIMENSIONS

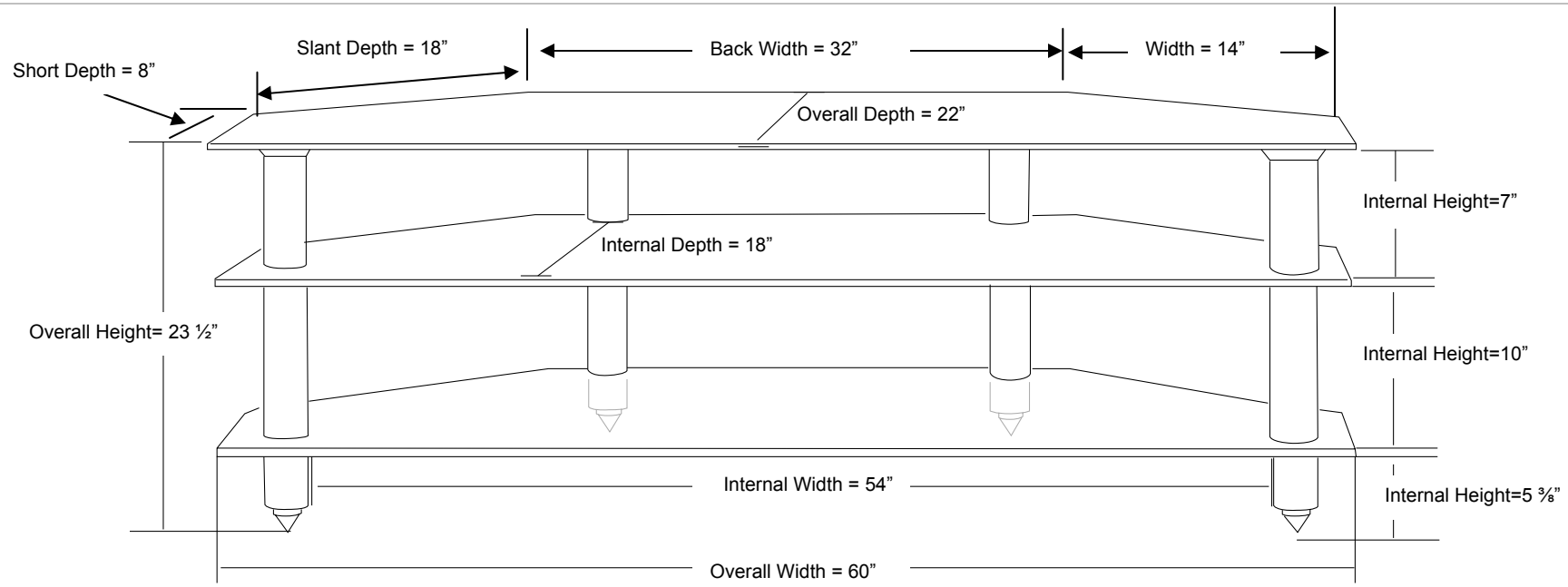

Weight Capacity: 250 lbs/shelf